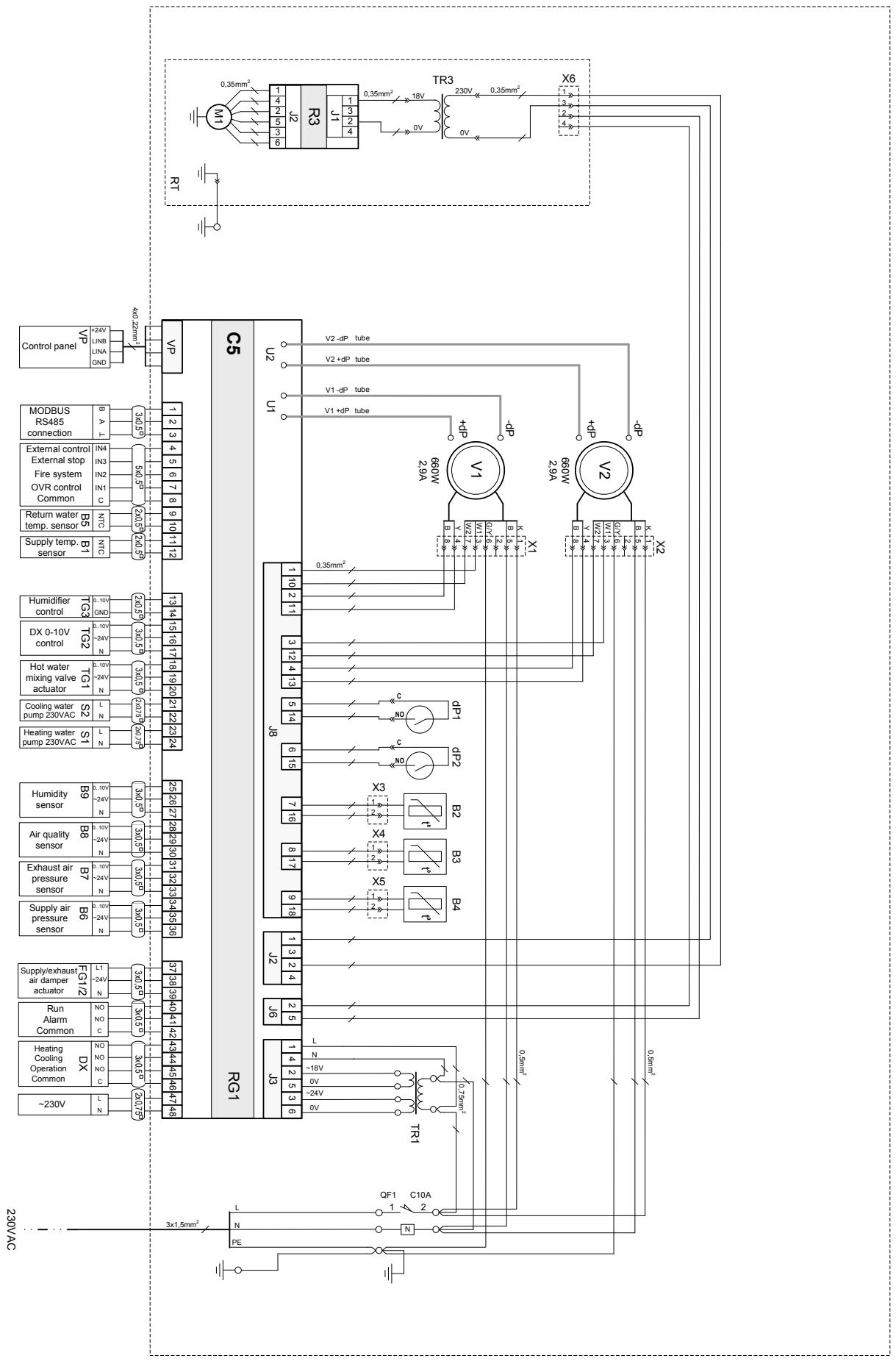

VERSO R 2000 U HW	Date: 14 12 19
WIRING DIAGRAM	