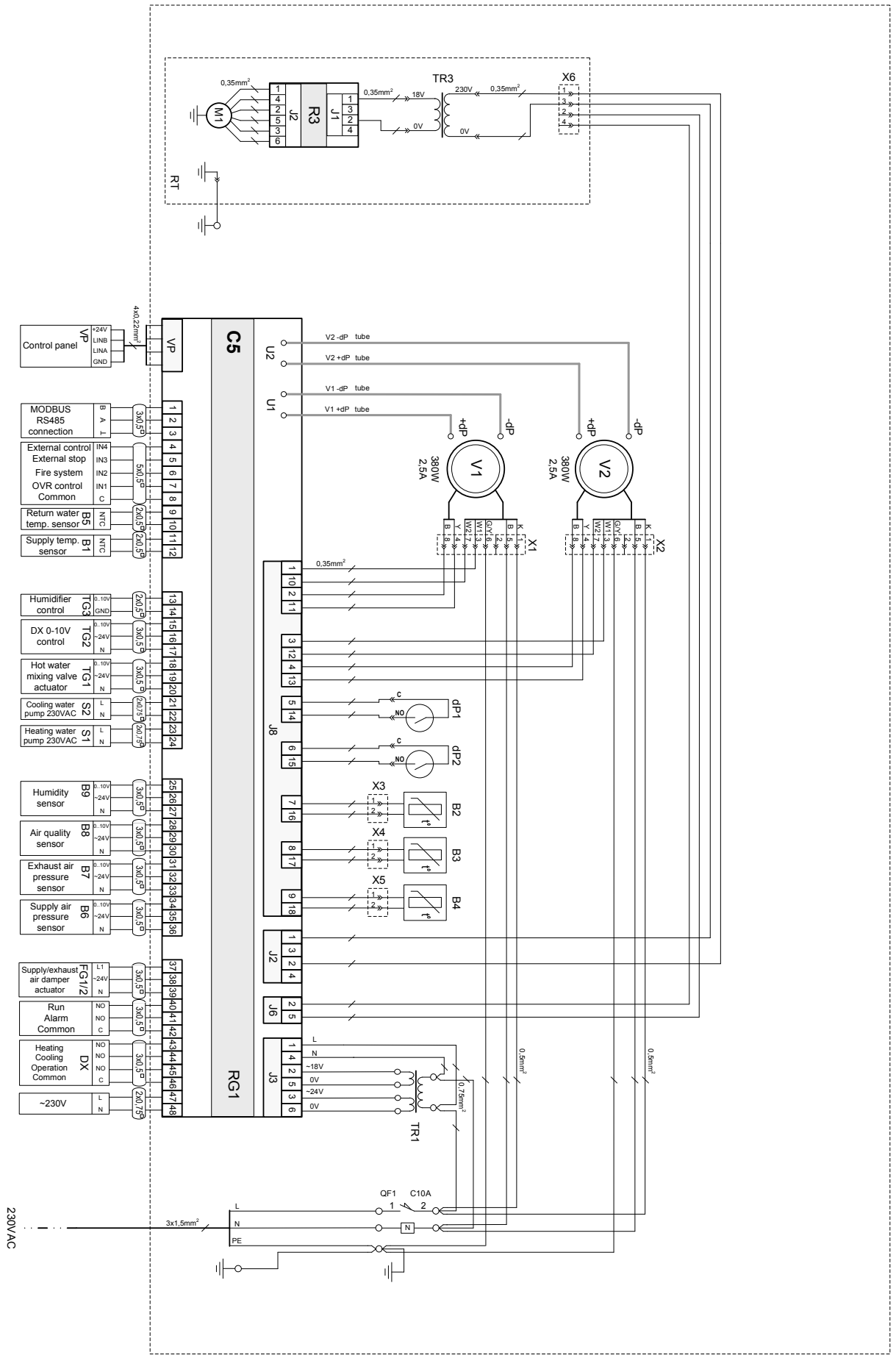

VERSO R 1300 U HW	Date: 14 12 19
WIRING DIAGRAM	